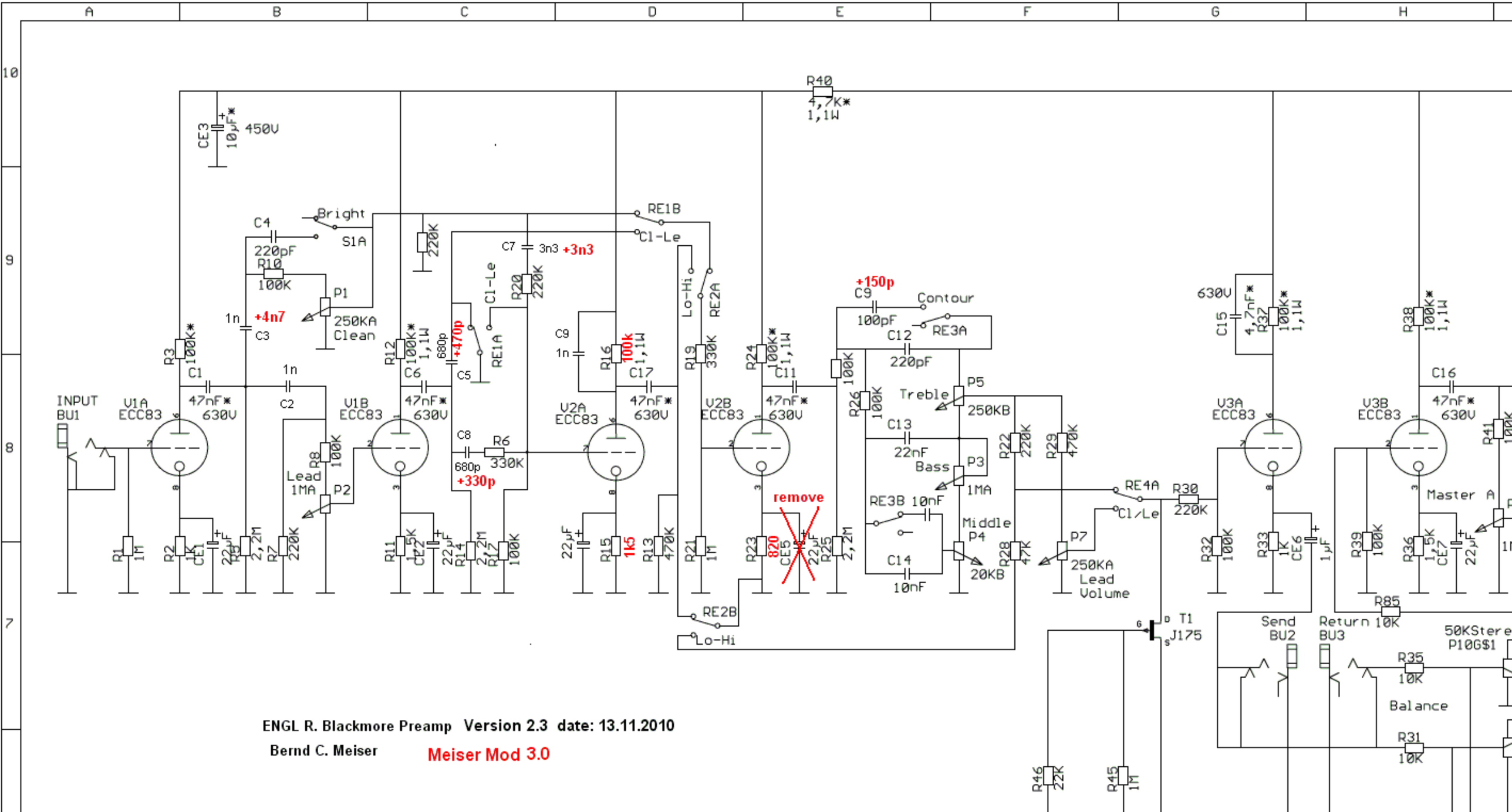
ENGL R. Blackmore Preamp Version 2.3 date: 13.11.2010
Bernd C. Meiser
Meiser Mod 3.0
INPUT BU1
V1A ECC83
V1B ECC83
V2A ECC83
V2B ECC83
V3A ECC83
V3B ECC83
Bright
S1A
C4 220pF
R10 100K
P1 250KA Clean
1n +4n7 C3
R3 100K*
C1 47nF* 630V
C2 1n
R8 100K
Lead 1MA
P2
R1 1M
R2 1K
CE1 22µF
R5 2,2M
R7 220K
R12 100K* 1,1W
C6 47nF* 630V
R11 1,5K
CE2 22µF
R14 2,2M
R17 100K
C7 3n3 +3n3
R20 220K
C1-Le
RE1A
680p +470p
C5
C8 680p +330p
R6 330K
C9 1n
R16 100k 1,1W
C17 47nF* 630V
22µF
R15 1k5
R13 470K
RE1B
C1-Le
Lo-Hi
RE2A
R19 330K
R21 1M
RE2B
Lo-Hi
R40 4,7K* 1,1W
R24 100K* 1,1W
C11 47nF* 630V
R23 820
remove
CE5 22µF
R25 2,2M
+150p C9 100pF
Contour
C12 220pF
RE3A
R26 100K
Treble
P5 250KB
C13 22nF
Bass
P3 1MA
RE3B 10nF
C14 10nF
Middle
P4 20KB
R22 220K
R29 470K
R28 47K
P7 250KA Lead Volume
RE4A
Cl/Le
R30 220K
T1 J175
R46 22K
R45 1M
630V
C15 4,7nF*
R37 100K* 1,1W
R32 100K
R33 1K
CE6 1µF
R38 100K* 1,1W
C16 47nF* 630V
R41 100K
R39 100K
R36 1,5K
CE7 22µF
Master A
R85 10K
Send BU2
Return BU3
50KStere P10G$1
R35 10K
Balance
R31 10K